Q-railing

Technical Report

Q- Line top mount Post system Line load, Impact & Point load testing

Date of report 09-11-2012

Testing conducted by/at:

Q-railing Europe GmbH & Co.KG
Marie Curie Strasse 8-14
46446 Emmerich am Rhein
Germany

1. Introduction

This report describes the test conducted at the Q-laboratory of Q-railing Europe GmbH & Co.KG. The test was conducted on the Q-line; top mounted post system assembled in different dimensions as shown.

2. Test arrangement

The barrier was mounted on to a rigid concrete structure with a test rig from steel with sufficient strength to withstand loads applied to it.

For the line load test, the load was applied to the hand railing horizontally. The point load was applied vertically on to the hand rail.

The load was measured with a load cell.

Laser distance sensors and a mechanical gauge were used to measure the deflection of the barrier from its neutral position.

3. Materials

1. Posts type.
   Stainless steel 316, art.no. 14091424212 & 14091504812 & 14094224800.
2. Anchoring
   High bond Anchor FAZ 8/10A4 to secure the barrier to the concrete art. No. 19410801014.
3. Glass
   4-0.76-4 laminated glass. 1500x800mm, 1000x800mm & 800x900mm.
4. Handrail brackets art.no 14071024212
5. Glass clamps model 14220904212
6. Hanrails model 14892524212

The anchors were tested in both directions parallel & perpendicular to the load direction.

Q-railing GmbH & Co. KG
Marie-Curie straße 8-14 | D-46446 | Emmerich am Rhein | Germany
T +49 (0) 2822-91569-0 | F +49 (0) 2822-91569-70
E sales@q-railing.de | www.q-railing.com

5. Arrangement of test assembly

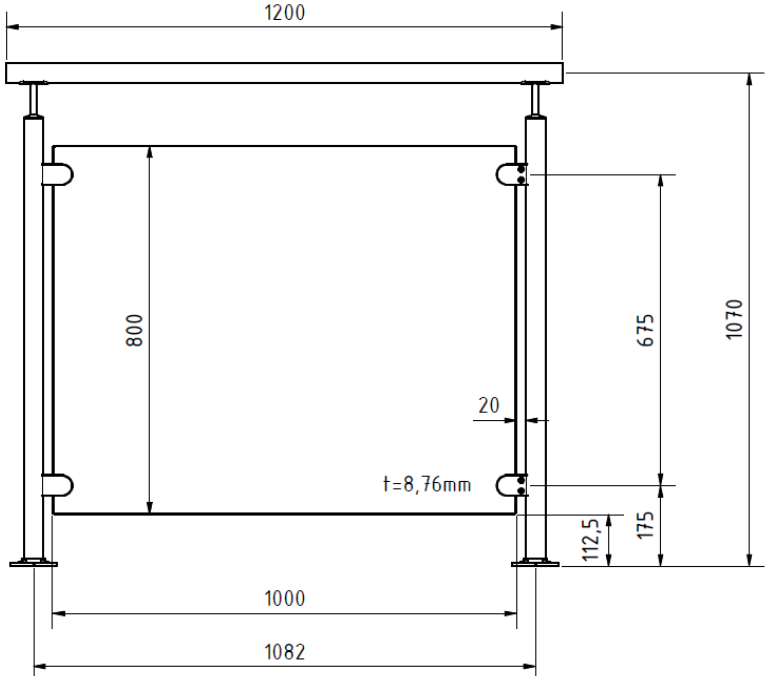

Pos.1.

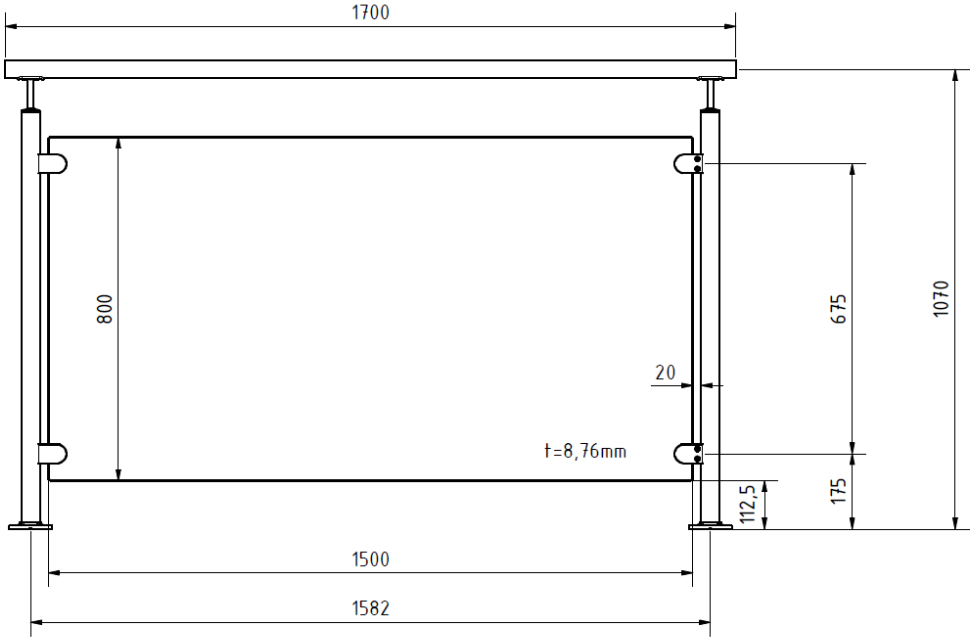

Pos.2

Q-railing GmbH & Co. KG
Marie-Curie straße 8-14 | D-46446 | Emmerich am Rhein | Germany
T +49 (0) 2822-91569-0 | F +49 (0) 2822-91569-70
E sales@q-railing.de | www.q-railing.com

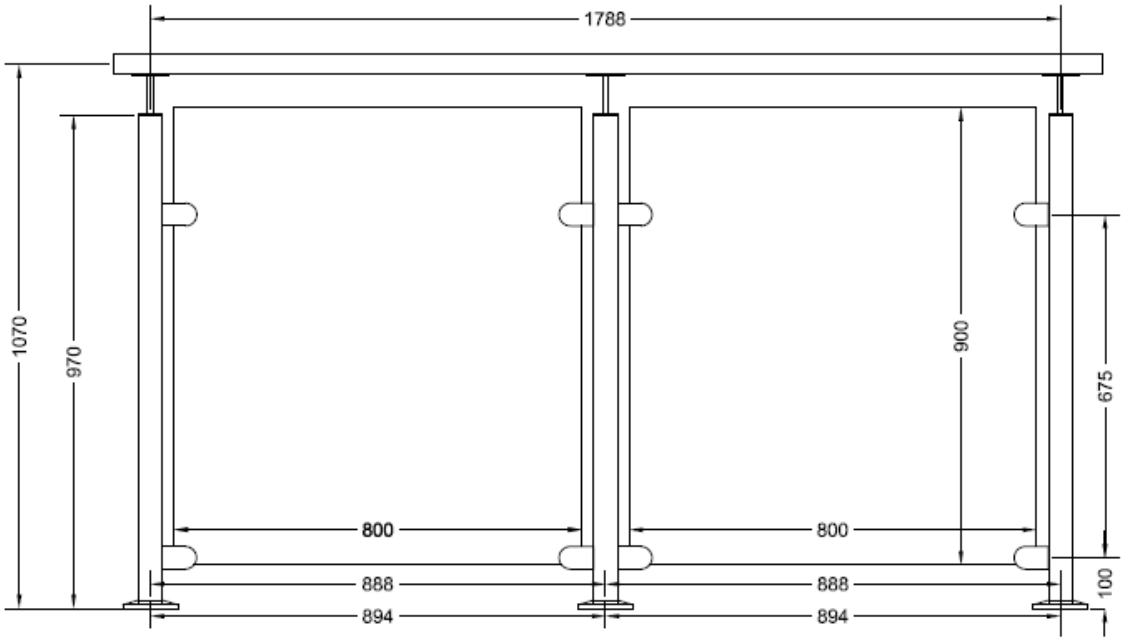

Pos.3

6. Test setup

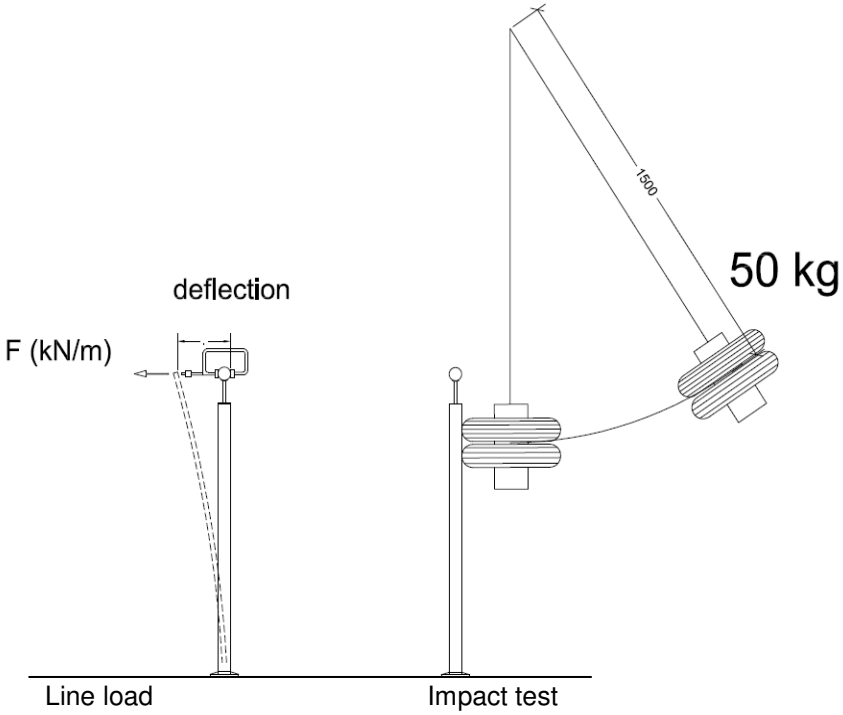

Q-railing GmbH & Co. KG
Marie-Curie straße 8-14 | D-46446 | Emmerich am Rhein | Germany
T +49 (0) 2822-91569-0 | F +49 (0) 2822-91569-70
E sales@q-railing.de | www.q-railing.com

7. Line load & the impact test.

Results are given in tabel1.

Table 1

					Line Load test					Pendulum test		
Pos. no	Glass T. mm	post distance mm	Post type mm	barrier height mm	0.36 kN/m	0.50 kN/m	0.74 kN/m	1.00 kN/m	1.50 kN/m	fall height	700	Flange connection & posision
					deflection mm.							
Pos. 1	8.76	1082	42.4 x 2	1070	13.5	17.61	24.65	36.4			passed	anchors // line load 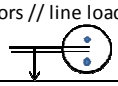
	8.76	1082	42.4 x 2	1070	11.78	15.82	22.75	30.67			passed	flange glue connection
Pos.2	8.76	1582	42.4 x 2	1070	29.11	51.91	91.00				passed	anchors // conc. Face 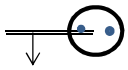
	8.76	1582	42.4 x 2	1070	23.45	31.97	46.57				passed	anchors // line load 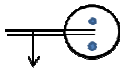
Pos. 3	8.76	888	42.4 x 2.6	1070	11.86	15.33	21.27	39.83			passed	anchors // line load 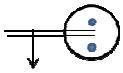
	8.76	894	48.3 x 2.6	1070	9.17	13.69	21.45	33.90			passed	
	8.76	894		1070	6.78	9.55	14.29	20.32	34.01			
					Post welded to flange both sides							
	8.76	894	48.3 x 2.0	1070	6.90	9.71	14.54	20.53	35.00		passed	flange glue connection

Pendulum impact is been tested with top rail.

8. Point load test:

The point load test was 1.0 kN applied at the middle top of the hand rail to calculate the strength of the hand rail. Maximum deflection registered for the 1.0 kN point load was 2.83 mm

Q-railing GmbH & Co. KG
Marie-Curie straße 8-14 | D-46446 | Emmerich am Rhein | Germany
T +49 (0) 2822-91569-0 | F +49 (0) 2822-91569-70
E sales@q-railing.de | www.q-railing.com

9. Comments:

The loading was applied to the hand rail at a height of 1.070 m above finished floor level.

10. General overview line load test

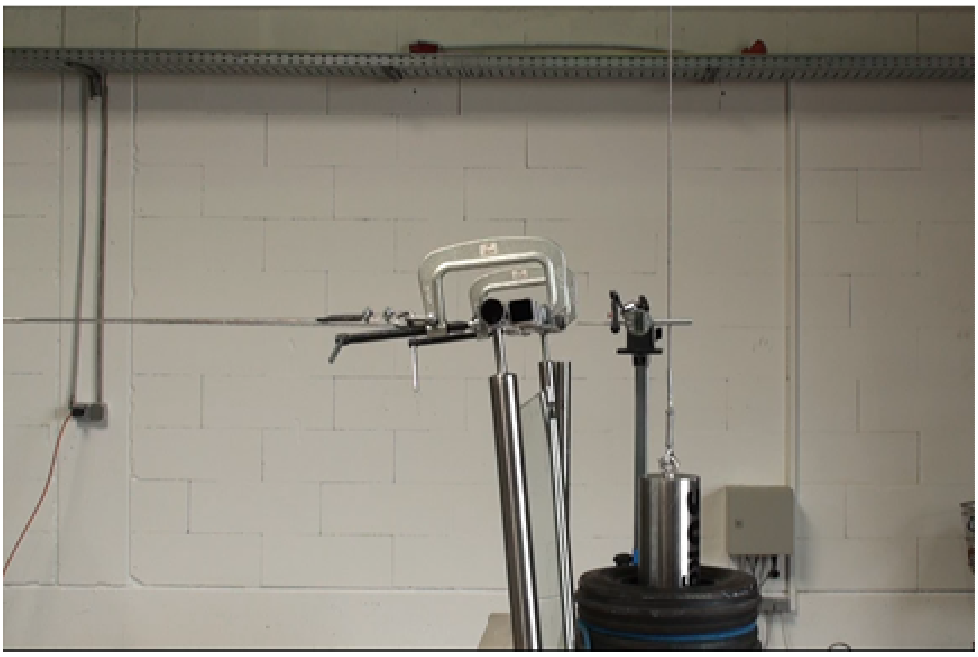

a. Line load test.

Q-railing GmbH & Co. KG
Marie-Curie straße 8-14 | D-46446 | Emmerich am Rhein | Germany
T +49 (0) 2822-91569-0 | F +49 (0) 2822-91569-70
E sales@q-railing.de | www.q-railing.com

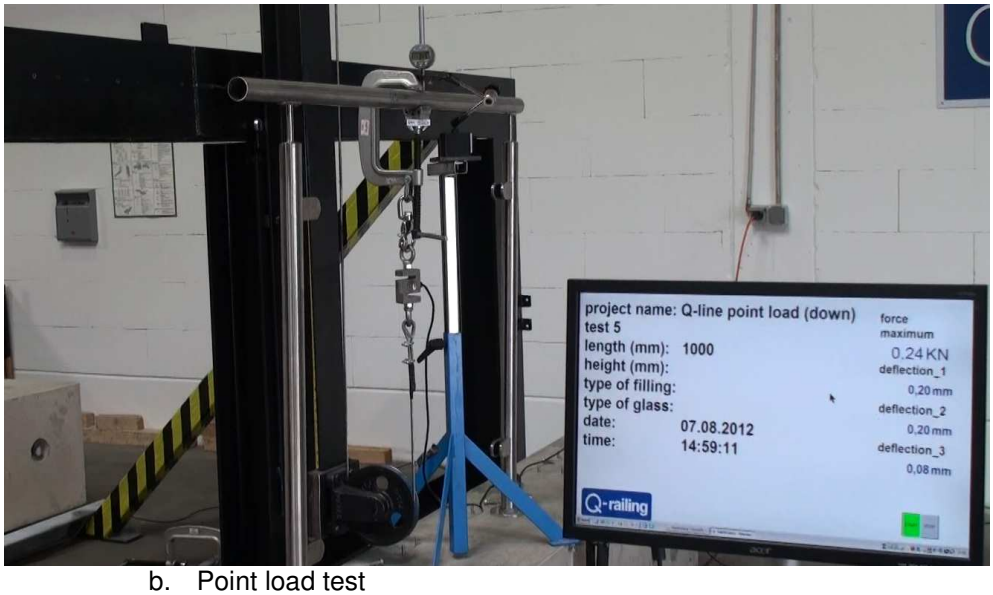

b. Point load test

Q-railing GmbH & Co. KG
Marie-Curie straße 8-14 | D-46446 | Emmerich am Rhein | Germany
T +49 (0) 2822-91569-0 | F +49 (0) 2822-91569-70
E sales@q-railing.de | www.q-railing.com