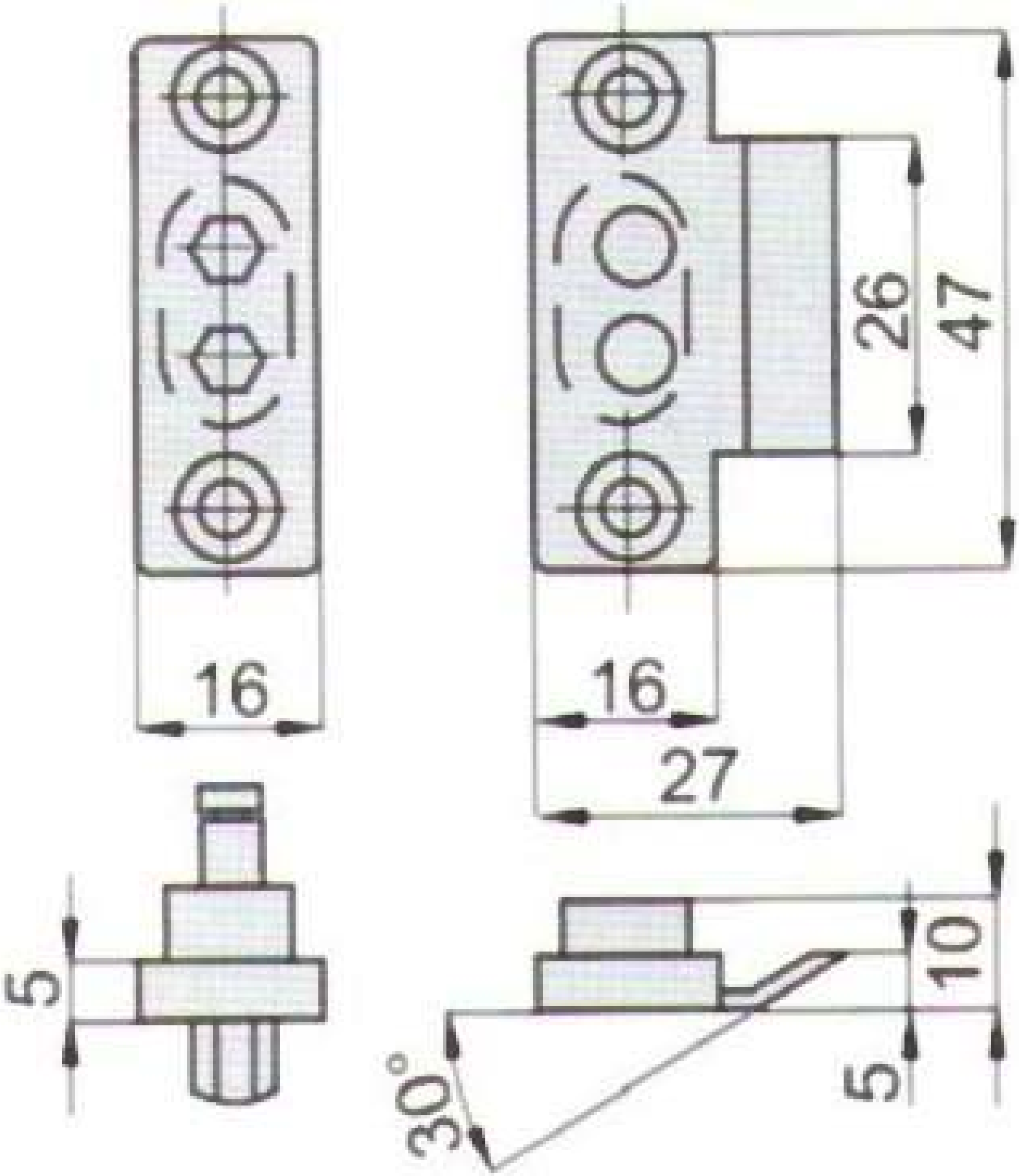
16
16
27
26
47
5
10
5
30°